January 25, 2013
Revision: REL

Celseon® Air Cooled Condensing Unit

Model: AKA9457ZAAD*
BoM: 2G714- R-404a 3/4 HP**

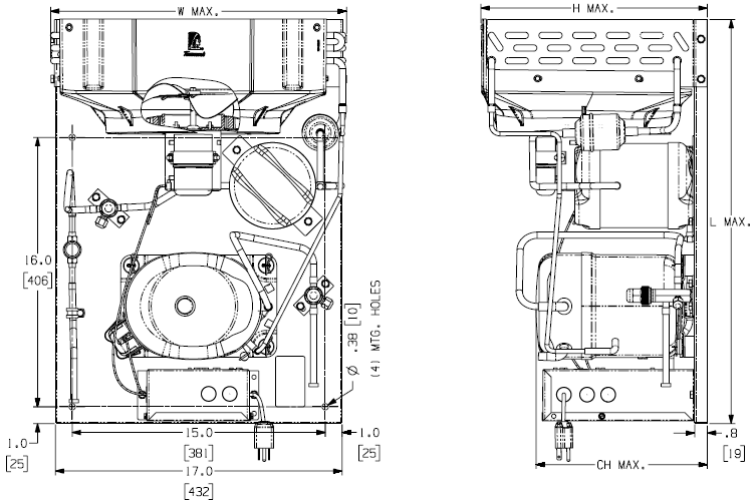

Model	Dimensions, inches				Line Connection*		Pumpdown	Air	Oil Ch	Gr. Wt.
	L	W	H	CH	Suction	Liquid	90 °F 90%	SCFM	Oz.	Lbs.
AKA9457ZAADA	24.0	17.5	13.4	10.2	3/8” S	3/8” S	N/A	270	17	66
AKA9457ZAADG					3/8” S	3/8” S	6.1 lbs			67
AKA9457ZAADH					3/8” S	3/8” S	N/A			66
AKA9457ZAADK					3/8” S	3/8” S				66
AKA9457ZAADC					3/8” S	3/8” S	6.1 lbs			67
AKA9457ZAADS					3/8” S	3/8” S	N/A			66
AKA9457ZAADJ					3/8” S	3/8” S	6.1 lbs			68
AKA9457ZAADP					3/8” S	3/8” S	6.1 lbs			68

* F = Flare, S = Solder, RF or RS = Rotolock with Flare or Solder Connections, C = Compression Fitting
Factory charge: 20 PSIG Nitrogen – **MUST BE EVACUATED**

		Ambient Temperatures											
Evaporator T,		80°F			90°F			100°F			110°F		
°F	PSIG	BTUH	Watts	Cond T	BTUH	Watts	Cond T	BTUH	Watts	Cond T	BTUH	Watts	Cond T
0	33.4	4323	894	99	3766	897	107	3236	888	115	2721	875	124
5	39.0	4779	943	101	4187	950	110	3620	947	118	3084	943	126
10	43.9	5283	995	104	4651	1005	112	4042	1008	120	3473	1011	128
15	49.8	5836	1048	106	5158	1063	114	4504	1072	123	3889	1080	130
20	56.1	6436	1105	109	5709	1123	117	5004	1138	125	4332	1151	133
25	62.9	7085	1163	112	6303	1186	119	5544	1206	127	4803	1222	135
30	70.2	7782	1225	115	6941	1252	122	6123	1276	130	5300	1294	138
35	77.9	8528	1288	118	7622	1320	125	6741	1348	132	5824	1367	140
40	87.0	9321	1355	121	8346	1390	128	7398	1423	135	6375	1442	143
45	95.1	10163	1423	124	9114	1463	131	8095	1500	138	6953	1517	145

60 Hz Performance
Return gas temp. 40°F, 5°F sub cooling

January 25, 2013
Revision: REL

Specifications/ Parts:

Unit Model	**AKA9457ZAADA**
Unit Bill of Material	**2G714-09**
Refrigeration Range	-10° F to +45° F
Design Pressure Low	181
Design Pressure High	450
Nominal Volts-Hz-Ph	115-60-1
Voltage Range	103-127
Min. Circuit Ampacity	13
Max. Fuse Size (amps)	20
Compressor Model	AKA9451ZXA
Comp. Bill of Material	AK170AT-037-P2
Compressor RLA/LRA	9.4/50
Overload	External
Relay	820ARR3D10
Run Capacitor	85PR370F20
Run Capacitor Rating	25MFD 370V(M) VDE
Start Capacitor	85PS250C30
Start Capacitor Rating	72-88 MFD 250V VDE
Fan Motor	810-10004
Fan Motor RLA	1.2
Fan Blade	515-10001
Fan Shroud/Guard Combo	707-00002
Condenser	506-00002
Unit Drawing	DGU1970-02
Wiring Diagram	91266-02
Replacement Kit: Relay	K71-19
Replacement Kit: O/L	K90-24

Unit Model	**AKA9457ZAADG**
Unit Bill of Material	**2G714-19**
Receiver Tank	510-10002
Liquid Valve	56630
Suction Valve	56630
Unit Model	**AKA9457ZAADH**
Unit Bill of Material	**2G714-29**
Liquid Valve	56630
Suction Valve	56630
Unit Model	**AKA9457ZAADK**
Unit Bill of Material	**2G714-39**
Power Cord	85106-14
Unit Model	**AKA9457ZAADC**
Unit Bill of Material	**2G714-59**
Receiver Tank	510-10002
Liquid Valve	56630
Suction Valve	56630
Power Cord	85106-14
Unit Model	**AKA9457ZAADS**
Unit Bill of Material	**2G714-69**
Liquid Valve	56630
Suction Valve	56630
Power Cord	85106-14
Unit Model	**AKA9457ZAADJ**
Unit Bill of Material	**2G714-79**
Receiver Tank	510-10002
Liquid Valve	56630
Suction Valve	56630
Filter Drier	70081
Sight Glass	70084
Unit Model	**AKA9457ZAADP**
Unit Bill of Material	**2G714-89**
Receiver Tank	510-10002
Liquid Valve	56630
Suction Valve	56630
Power Cord	85106-14
Filter Drier	70081
Sight Glass	70084
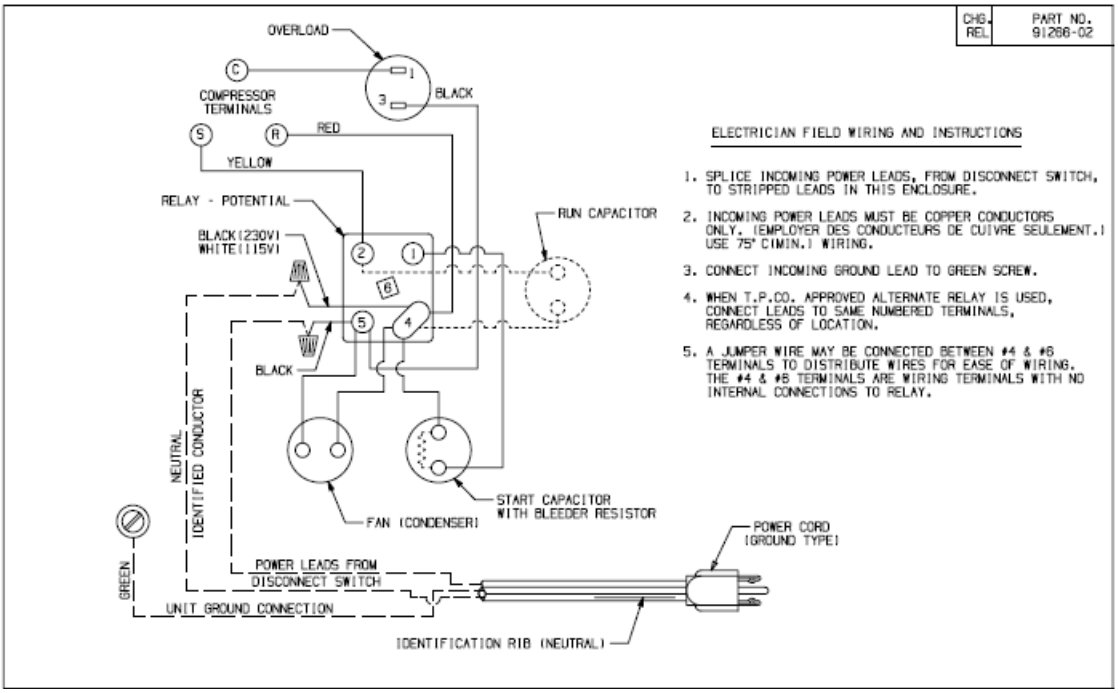
Electrical Diagram Page 3